LED Flush Mounts

MODEL 1300-10 | 1302-14 | 1303-16

ORTECH

Product Specification Sheet

HIGHLIGHTS

- Cold rolled steel plate and rings
- Efficient heat dissipating aluminum pillars
- High transmittance & UV Protection for Outdoor Light Up
- Cover made of a High quality poly methyl methacrylate (PMMA) material

Available in following colours:

Satin Nickel (SN)

Chrome (CH)

Black (BK)

SPECIFICATIONS

Model	Wattage	Voltage	Lumens	Beam Angle	Lifetime	CRI	Dimmable	Colour Finish	Colour Temp.	Operating Temp.
1300-10	16W	120V	1300 lmn	120°	35000 hours	80	Yes	Satin Nickel (SN) Chrome (CH) Black (BK)	3K (Warm White) 5K (Cool White)	-20°C ~ +40°C
1302-14	26W		2000 lmn							
1303-16	32W		2400 lmn		50000 hours					

- **Dimensions:** 261 mm x 261 mm x 90 mm (1300-10)
  362 mm x 362 mm x 103 mm (1302-14)
  407 mm x 407 mm x 110 mm (1303-16)

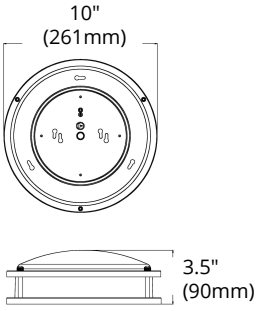

1300-10

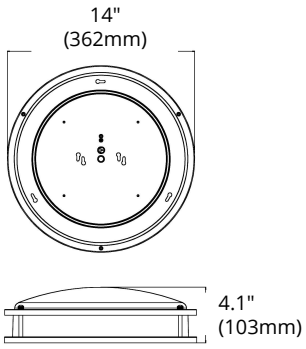

1302-14

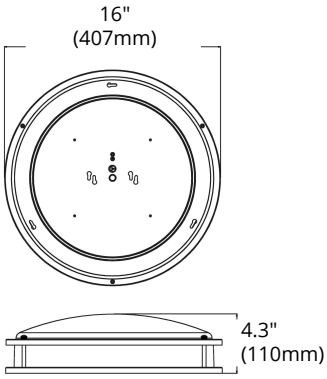

1303-16

Reference	QTY.	Remarks	Project:
			Location:
			Architect:
			Engineer:
			Contractor:
			Submitted by:
			Date:

info@ortechindustries.com
www.ortechindustries.com

13376 Comber Way
Surrey BC V3W 5V9

375 Admiral Blvd
Missisauga, ON L5T 2N1

1-888-543-6473
1-888-541-6474