Humidity Sensors

MODEL ODM-SCK

ORTECH

Product Specification Sheet

HIGHLIGHTS

- Sensitive Humidity Sensor for Next Generation Micro Compact Series Fans
- Capable of detecting humidity quickly and accurately and senses humidity at ceiling level
- Responds to humidity levels that exceed the users' desired set point

FEATURES

- Humidity Sensor allows you to present the humidity level between 50% and 70%
- Factory set, field adjustable humidity sensitivity
- When the humidity exceeds the users' desired set point, the fan will elevate to high speed operation
- 5~6 minutes timer allows fan to operate longer after the humidity has reached its settings
- Our Humidity Sensor conserves energy by allowing the fan to operate only when required

Compatible Fans
(sold separately)

ODM-5004
ODM-8010

Next Generation
Micro Compact Series Fans

info@ortechindustries.com
www.ortechindustries.com

13376 Comber Way
Surrey BC V3W 5V9

375 Admiral Blvd
Mississauga, ON L5T 2N1

1-888-543-6473
1-888-541-6474

Humidity Sensors

ORTECH

Product Specification Sheet

MODEL ODM-SCK

DIMENSIONS

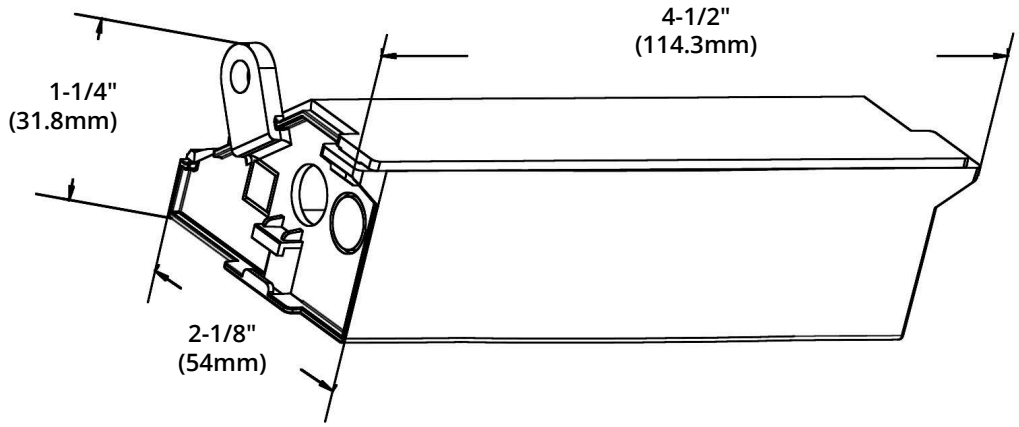

WIRING DIAGRAM

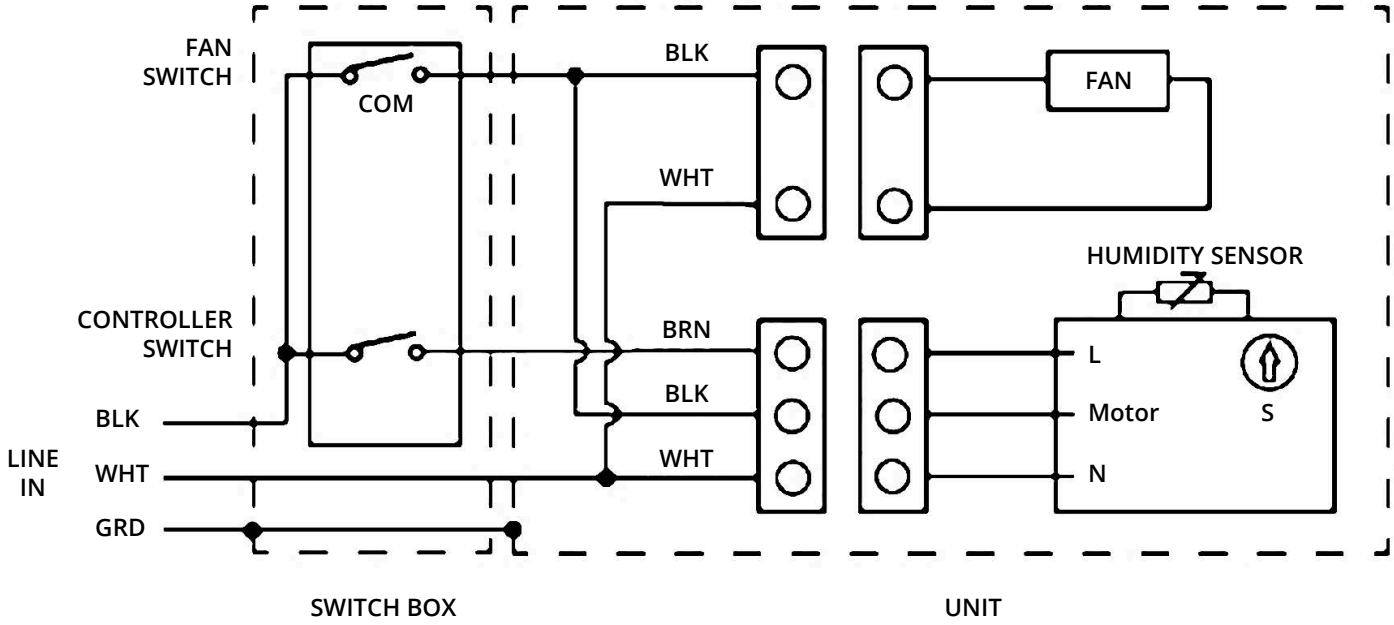

Reference	QTY.	Remarks	Project:
			Location:
			Architect:
			Engineer:
			Contractor:
			Submitted by:
			Date:

info@ortechindustries.com
www.ortechindustries.com

13376 Comber Way
Surrey BC V3W 5V9

375 Admiral Blvd
Mississauga, ON L5T 2N1

1-888-543-6473
1-888-541-6474