Premium Series

MODEL OD-15011

Product Specification Sheet

Optional

LED/Fluorescent light
Humidistat Motion Sensor
Speed controller Metal Grille

HIGHLIGHTS

- Ventilating fan should be ceiling or wall mounted and capable of exhausting air quietly and efficiently
- It comes with a capacitor start motor which is known for its high efficiency and long lasting reliability
- It holds an ETL evaluation and conforms to UL and cUL safety standards

SPECIFICATIONS

Model	OD-15011	
Static Pressure in inches w.g.	0.1	0.25
Air Volume (CFM)	150	130
Noise (sones)	1.1	
Fan Watts	43W	
Duct Diameter	6"	
Power Rating (V/Hz)	120/60	

- **Housing Size:** 266.7 mm x 289 mm x 193.7 mm
- **Grille Dimensions:** 330.2 mm x 355.6 mm

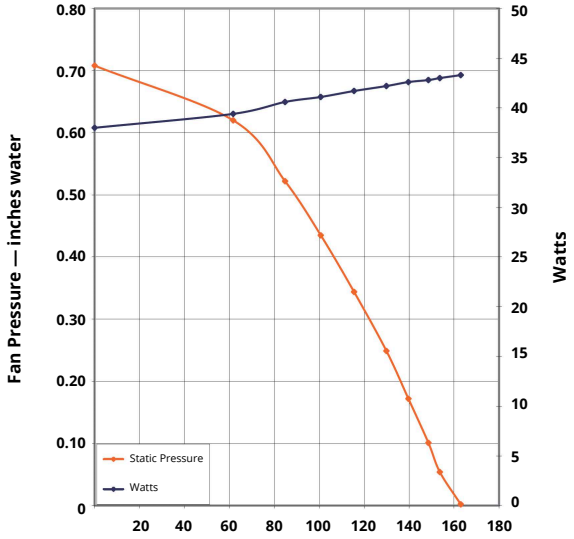

Fan Flow Rate — CFM Standard Air

HOUSING

- Made of rugged 26 GA galvanized steel
- Includes an attachable 6" metallic collar with built-in back draft damper
- Double hanger bar mounting brackets that are adjustable up to 24 inch span allows for ideal positioning

MOTOR / BLOWER

- Plug in permanently lubricated motor — Engineered for continuous operation
- The motor is energy efficient for continuous duty operation
- Power rating should be 120 volts and 60 Hz
- Fan shall be ETL and cETL listed for tub/shower enclosure when used with GFCI branch circuit
- Motor comes with built-in overload disconnect for safety and longer motor life
- Our Premium series operates at lower RPM's to give you quieter operation

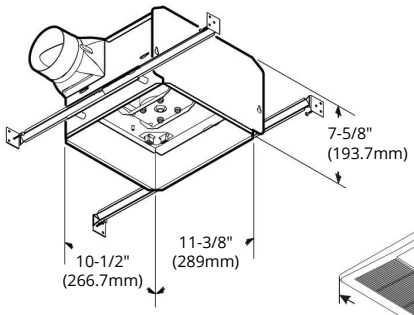

GRILLE

- The Premium grille is low profile that has elegance and still able to maintain its simplicity
- Made of a rugged polymeric resin that is known for its long life durability
- Comes with torsion spring clips that helps mount grille evenly

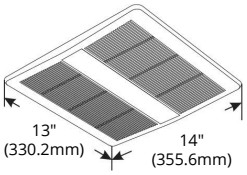

TYPICAL SPECIFICATIONS

- Ceiling ventilator shall have corrosion resistance galvanized steel housing with 4 point mounting capability
- It shall be ducted to a roof vent or wall cap using 6 inch round pipe
- Blower assembly shall be removable, have a centrifugal type blower wheel and permanently lubricated motor designed for continuous operation
- ORTECH Premium ventilators come with permanent split capacitor motor which improves efficiency

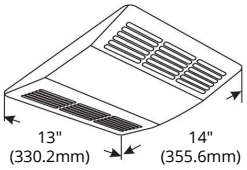

Optional Metal Grille

Reference	QTY.	Remarks	Project:
			Location:
			Architect:
			Engineer:
			Contractor:
			Submitted by:
			Date:

info@ortechindustries.com
www.ortechindustries.com

13376 Comber Way
Surrey BC V3W 5V9

375 Admiral Blvd
Mississauga, ON L5T 2N1

1-888-543-6473
1-888-541-6474