4" Trims

MODEL ODT1-451

ORTECH

Product Specification Sheet

HIGHLIGHTS

Round 4" MR16 50W Max. voltage trim with various colour options

- To be used in low and line voltage application
- Painted finish is powder coated for abrasion resistance
- Electroplated finish are anodized for abrasion resistance, clear lens included. Steel metal clips secure housing

SPECIFICATIONS

Model	**ODT1-451**
Application	Guest room
Material	Metal
Mounting	Suitable for all the 4" recessed can
Lamp Type	MR16 50W Max.

COLOUR OPTIONS

ODT1-451 WH

White Trim

ODT1-451 SN

Satin nickel trim

ODT1-451 ORB

Oil rubbed bronze trim

ODT1-451 BK

Black trim

DIMENSIONS

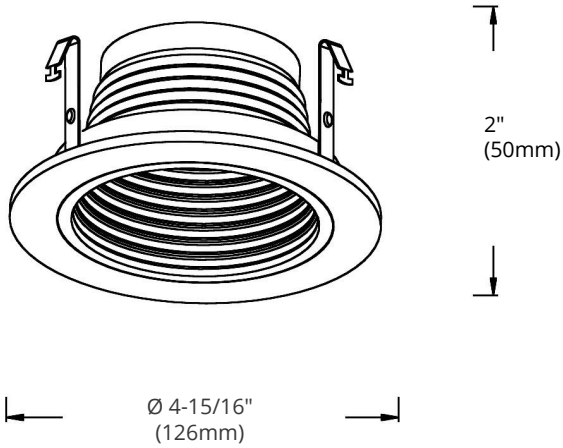

Reference	QTY.	Remarks	Project:
			Location:
			Architect:
			Engineer:
			Contractor:
			Submitted by:
			Date:

ORTECH reserves the right to modify at any time, without notice, any or all of our product's features, designs, components and specifications to meet market changes.

info@ortechindustries.com
www.ortechindustries.com

13376 Comber Way
Surrey BC V3W 5V9

375 Admiral Blvd
Mississauga, ON L5T 2N1

1-888-543-6473
1-888-541-6474