LED Slim Lights

MODEL SLIM-RG2-5CCT

ORTECH

Instruction Manual

WARNING

WARNING — THE INSTALLATION MUST BE CARRIED OUT BY A QUALIFIED ELECTRICIAN.

1. LED Slim Lights are suitable for indoor use only. DO NOT use outdoors
2. Please keep the LED Slim Lights away from any corrosive substance, and please use dry cloth when you clean them
3. LED Slim Lights can only be installed by a qualified electrician
4. Before installation or maintenance, please disconnect the power to prevent electric shock

Application Notice

1. For your safety, this fixture MUST be wired in accordance to local electrical codes and ordinances
2. Turn power off from the electrical panel before starting installation or attempting any maintenance. Indoor installation only

CAUTION

PLEASE READ INSTRUCTION BEFORE COMMENCING INSTALLATION AND RETAIN FOR FUTURE REFERENCES.
Electrical products can cause death or injury, or damage to property.
If in any doubt about the installation or use of this product, consult a competent electrician.

INSTALLATION GUIDE

Tools Required

- Saw
- Measuring Tape
- Electrical Wiring (use type and gauge suitable for application to connect the fixtures)

Driver Wiring

1. Open the hardwire box swing cover and remove the appropriate knockout(s)
2. Insert the electrical supply cable through the knockout and secure with a cable connector (sold separately)
3. Using wire nuts, connect GREEN ground wire of cable to GREEN wire on box. Connect WHITE wire of cable to WHITE wire of box. Connect BLACK wire of cable to BLACK wire of box (see Fig.2)
4. Place all wiring and connections back into the box and close the cover
5. Insert hardwire box through the mounting hole (see Fig.3).

   New Construction Applications:
   Hardwire box shall be firmly secured to studs, joists, or similar fixed structural units

   Remodel Applications:
   DO NOT require the hardwire box to be firmly secured after the mounting plates, studs, joists, or structural units have been concealed

Pre-installation

1. Push the baffle on the module, then mount the rorund trim on the module (see Fig.1). Twist the trim to lock on the module securely
2. Turn power OFF from the electrical panel before starting installation
3. Locate a suitable position to plate the fixture and open in accordance to the cut-hole dimensions
4. Run electrical wire from the switch (power supply) through the mounting hole — use NMD90 Romex or BX cable

Fig.1

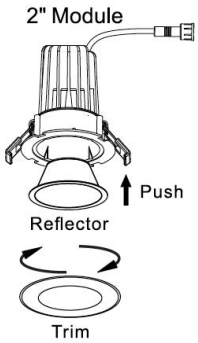

Fig.3

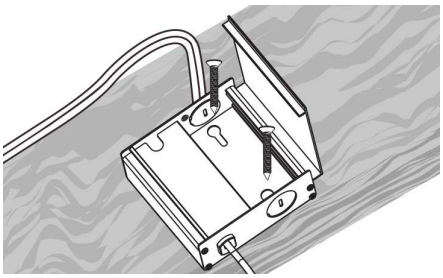

Fig.2

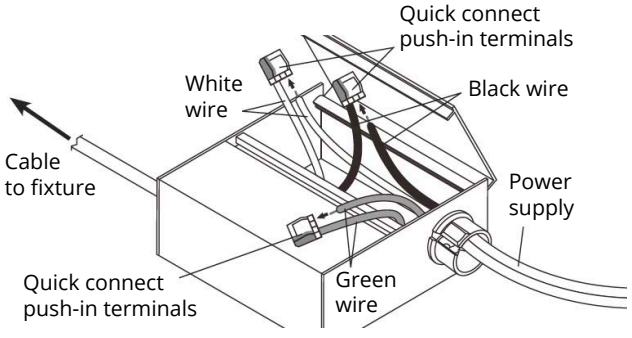

info@ortechindustries.com
www.ortechindustries.com

13376 Comber Way
Surrey BC V3W 5V9

375 Admiral Blvd
Mississauga, ON L5T 2N1

1-888-543-6473
1-888-541-6474

LED Slim Lights

MODEL SLIM-RG2-5CCT

Instruction Manual

INSTALLATION GUIDE

Fig.4

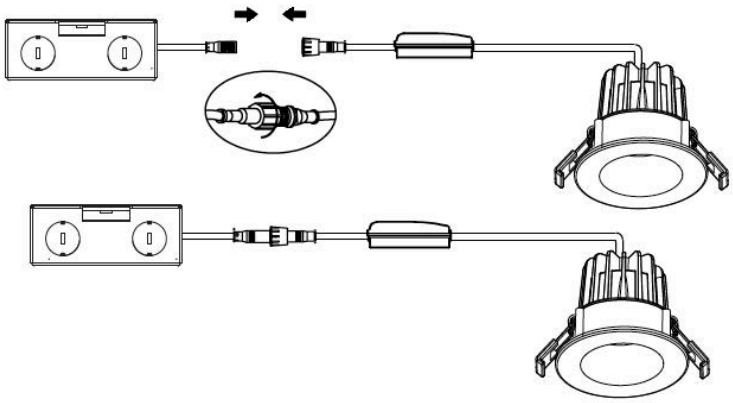

Fig.5

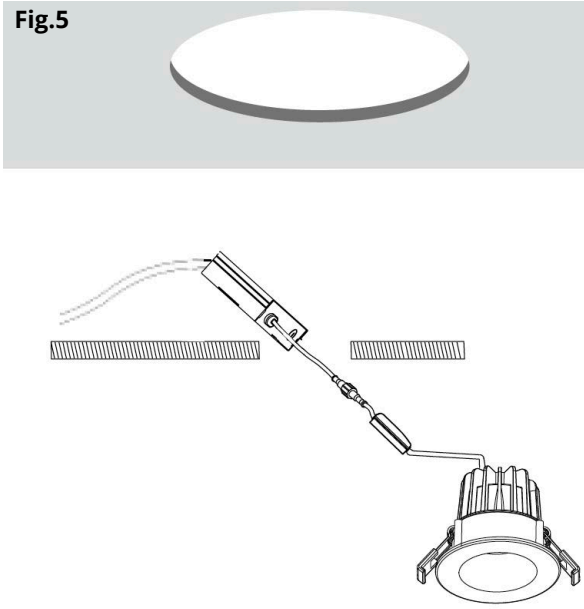

Fig.6

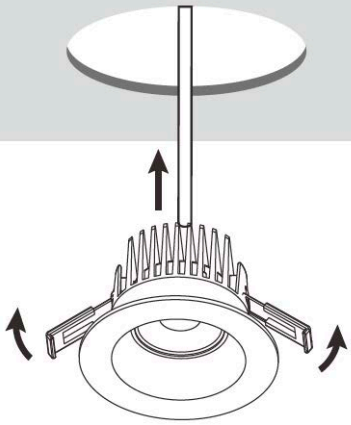

Fixture Installation

1. Connect light engine. Be sure to properly align connectors and fully screw down connector cover (see Fig.4)
2. Connect the fixture to the hardwire box by inserting and twisting the male / female connectors (see Fig.5)
3. Push spring loaded clips on the fixture upwards and insert fixture base into the mounting hole. Release the clips and fixture will be pulled flush to the ceiling (see Fig.6)
4. Once assembly is complete, turn ON power to confirm that fixture is working properly

ORTECH reserves the right to modify at any time, without notice, any or all of our product's features, designs, components and specifications to meet market changes.

info@ortechindustries.com
www.ortechindustries.com

13376 Comber Way
Surrey BC V3W 5V9

375 Admiral Blvd
Mississauga, ON L5T 2N1

1-888-543-6473
1-888-541-6474